CALC. BY RMN DATE 8/92	LOG/UNI-347-1.36/0.00 LOG C.R. 271	OHIO	63/73
CHKD. BY DLG DATE 9/92		FHWA REGION 5	1/11
FEDERAL PROJECT		STATE PROJECT 06554 (0)	

RIGHT OF WAY PLANS

CENTERLINE SURVEY PLAT
LOG/UNI - 347 - 1.36/0.00
LOG C.R. 271

LOGAN COUNTY ROAD 271
PERRY TOWNSHIP
LOGAN COUNTY
V.M.S. 3164 & 4689

EXIST. CURVE DATA
COUNTY ROAD #271
P.I. STA. 9+22.14
Δ_T= 20°00'00" LT.
Δ_c= 05°00'00" LT.
D = 06°00'00"
R = 954.93'
L = 83.33'
Ls= 250.00'
Θ_s= 07°30'00"
L.T.=166.82'
S.T.= 83.47'
Ts = 293.79'

60 0 60 120
SCALE IN FEET

PROPOSED CURVE DATA
C/L SURVEY C.R. #271
P.I. STA. 19+42.98
Δ= 07°17'39" LT.
D_c= 05°00'00"
R= 1145.91'
L= 145.88'
T= 73.04'
E= 2.32'

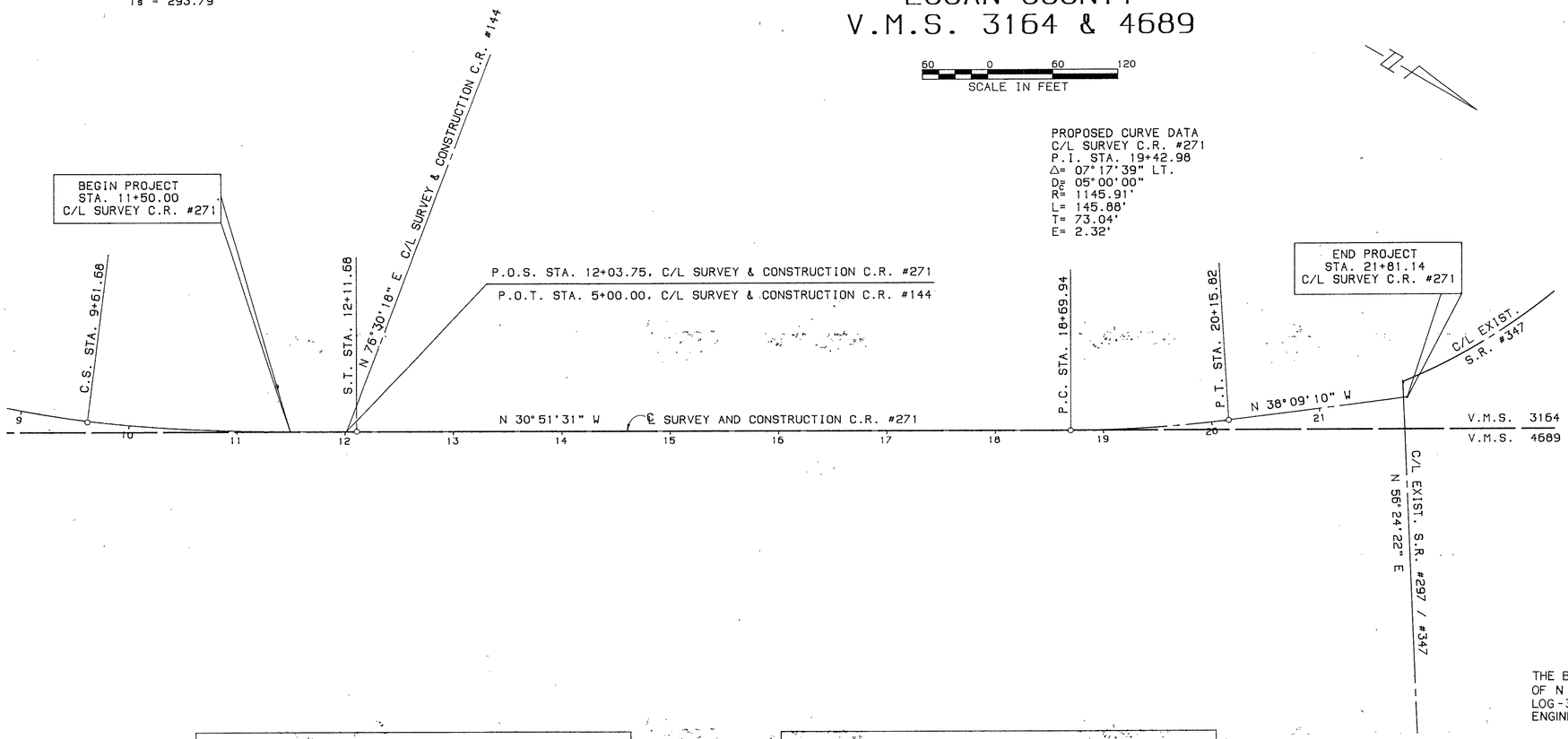

RECEIVED _____ OF _____
RECORDED _____
PLAT BOOK _____ PAGE _____
SIGNED _____
FEE _____ COUNTY RECORDER

CENTERLINE REFERENCE MONUMENTS ARE SHOWN ON STANDARD CONSTRUCTION DRAWING MC-1 (REV. 6-13-69) OF THE DEPARTMENT OF TRANSPORTATION. THE PLACING OF THE MONUMENTS SHALL BE UNDER THE DIRECTION OF A REGISTERED SURVEYOR AND ARE TO BE SET AS SHOWN BY THE HIGHWAY CONTRACTOR AT THE TIME OF CONSTRUCTION. ANY ALTERATIONS, WITH PRIOR APPROVAL OF THE OHIO DEPARTMENT OF TRANSPORTATION, SHALL BE NOTED AND O.D.O.T. SHALL BE NOTIFIED OF THE NEW LOCATIONS.

DETAIL FOR SETTING MONUMENTS

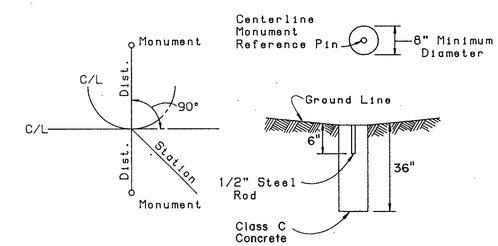

THE BEARING BASIS IS THE CENTERLINE OF C.R. 271 OF N 30°51'31" W AS SHOWN ON STATE HIGHWAY PLAN LOG-347-0.00 AND AS FILED IN THE LOGAN COUNTY ENGINEER'S OFFICE.

PROPOSED REFERENCE MONUMENTS		
STATION	LT.	RT.
13+00	60'	50'
18+69.94	40'	50'
20+15.82	45'	40'

EXISTING MONUMENTS		
STATION	LOCATION	DESCRIPTION
9+20.02	17.44' RT.	MONUMENT
15+96.52	272.44' RT.	IRON PIN
16+37.76	146.00' RT.	IRON PIN
16+87.00	30.03' RT.	IRON PIN
16+99.74	0.75' LT.	BOLT
19+75.38	4.87' RT.	RAILROAD SPIKE
21+61.27	58.30' RT.	MONUMENT
21+69.41	29.01' RT.	RAILROAD SPIKE
21+75.70	29.81' RT.	RAILROAD SPIKE
21+78.75	4.37' LT.	RAILROAD SPIKE
21+79.30	10.50' LT.	RAILROAD SPIKE

I HEREBY CERTIFY THAT THIS PLAT IS A TRUE DELINEATION OF A SURVEY MADE FOR THE STATE OF OHIO IN 1990.
BY
R.D. ZANDE & ASSOCIATES, LTD.
CONSULTING ENGINEERS
COLUMBUS, OHIO
Theodore L. Wallace DATE 9-29-92
REGISTERED SURVEYOR NO. 4650

SURVEYOR'S SEAL

PROPERTY MAP
LOG/UNI - 347 - 1.36/0.00
LOG C.R. 271

LOGAN COUNTY ROAD 271
PERRY TOWNSHIP
LOGAN COUNTY
V.M.S. 3164 & 4689

CALC BY JMH DATE 8/92	LOG/UNI-347-1.36/0.00 LOG C.R. 271	OHIO	64 / 73
CHKD BY GHG DATE 9/92		FHWA REGION 5	
FEDERAL PROJECT		STATE PROJECT 06554 (0)	2 / 11

RIGHT OF WAY PLANS

EXISTING UTILITIES

UNITED TELEPHONE CO. OF OHIO
127 NORTH MAIN STREET
BELLEFONTAINE, OHIO 43311
(513) 599-9276

DAYTON POWER AND LIGHT
P.O. BOX 1247
COURTHOUSE PLAZA S.W.
DAYTON, OHIO 45401
(513) 227-2498

NOTE:
THE LOCATIONS OF THE UNDERGROUND UTILITIES SHOWN ON THESE PLANS ARE AS OBTAINED FROM THE OWNER OF THE UTILITIES AS REQUIRED BY SECTION 153.64 OF THE OHIO REVISED CODE.

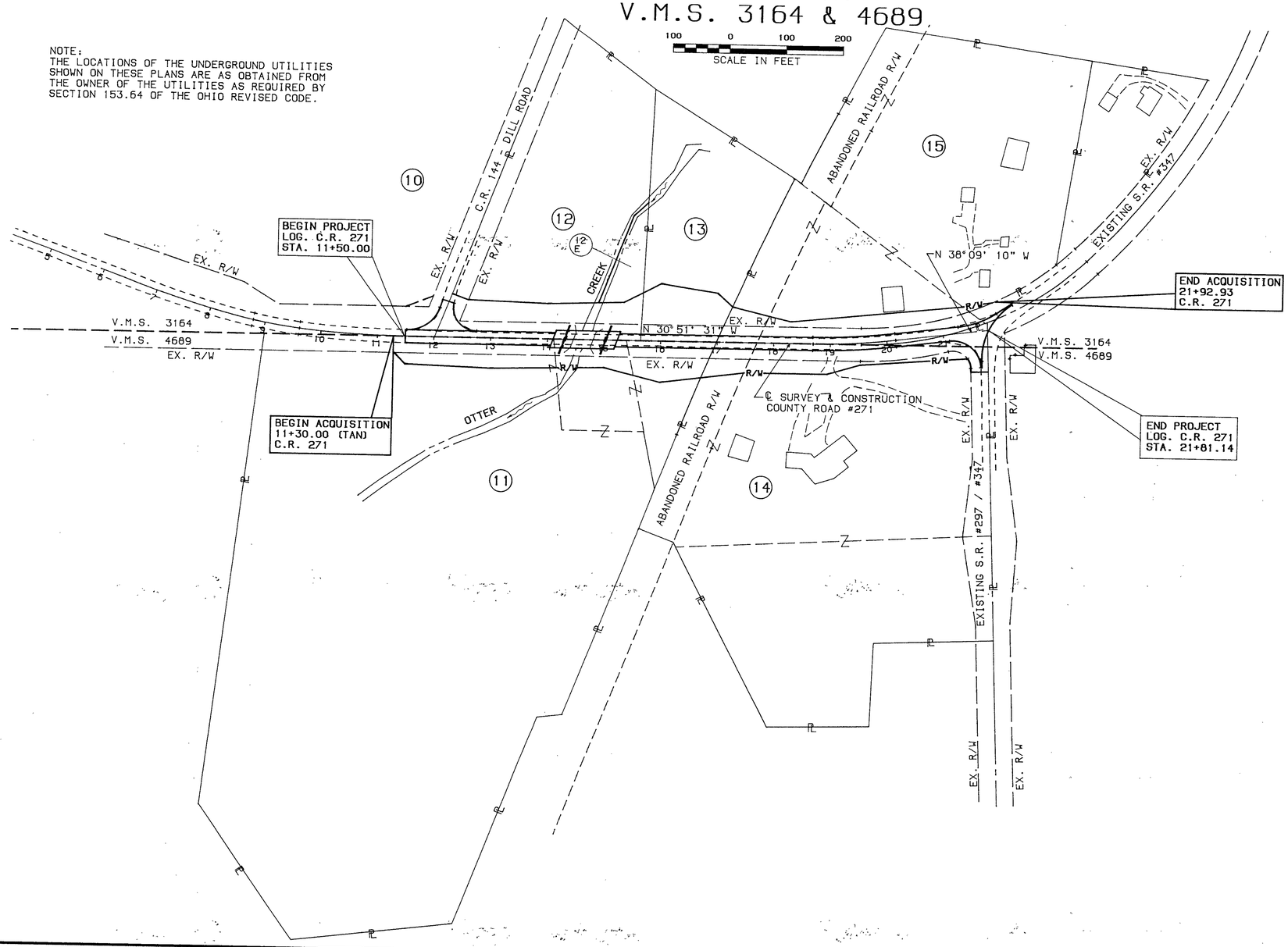

PARCEL #	OWNER
10	HONDA OF AMERICA, MFG. INC.
11	CARL BURKHOLDER
12	MARY KERNS
13	GARY BAKER
14	DAVID L. & LORI JAMES
15	GARY D. & MELONY J. BAKER

TYPE FUNDS: STATE

REV	DATE	DESCRIPTION

DATE OF COMPLETION

TOTAL NUMBER OF ...
6 OWNERSHIPS
0 TOTAL TAKES
0 OWNERSHIPS W/STRUCTURES INVOLVED
0 OWNERSHIPS W/"P" ITEMS

SUMMARY OF ADDITIONAL RIGHT OF WAY

C.R. 271

CALC. BY BMN DATE 8/92	LOG/UNI-347-1.36/0.00 LOG C.R. 271	OHIO	65/73
CHKD. BY GHG DATE 9/92		FHWA REGION 5	
FEDERAL PROJECT		STATE PROJECT 06554 (0)	3/11

PID NO. 5987

PARCEL	OWNER	SHEET NO.	OWNER RECORD BOOK	OWNER RECORD PAGE	AUDITOR'S PARCEL NO.	RECORD AREA (AC)	TOTAL P.R.O.	GROSS TAKE	P.R.O. IN TAKE	NET TAKE	STRUCTURE	NET RESIDUE LEFT	NET RESIDUE RIGHT	TYPE FUNDS	REMARKS AND PERSONALTY	AS ACQUIRED BOOK	AS ACQUIRED PAGE
10T	HONDA OF AMERICA, MFG. INC.	4	O.R. 56	241	32-112-00-00-034	3148.373		0.009	0.000	0.009	-	3148.373	-	STATE	TEMPORARY TO REBUILD SLOPES DURATION 18 MONTHS (6 MONTH INCREMENTS)		
11	CARL BURKHOLDER	4 & 5	O.R. 139	323	32-111-00-30-000	14.973	0.54	0.721	0.388	0.333	-	-	14.10				
12	MARY KERNS	4 & 5	334	187	32-111-19-01-0111	3.25	0.74	0.560	0.280	0.280	-	2.049	-				
12E		5			"			0.181	0	0.181							
13	GARY BAKER	5 & 6	408	230	32-111-19-01-012	1.8	0.096	0.324	0.096	0.228	-	1.476	-				
14	DAVID L. & LORI JAMES	5,6&7	O.R. 116	295	32-111-16-06-001	7.74	0.61	0.570	0.382	0.188	-	-	6.942				
15	GARY D. & MELONY J. BAKER	6 & 7	385	753	32-111-15-03-003	3.96	0	0.006	0	0.006	-	3.954	-				
			396	306	32-111-15-03-004	1.60	0.315	0.518	0.315	0.203	-	1.082	-				
	(TOTAL)					5.56	0.315	0.524	0.315	0.209		5.036	-	STATE			

TYPE FUNDS: STATE

REV	DATE	DESCRIPTION
		DATE OF COMPLETION

CALC. BY BMH DATE 8/92	LOG/UNI-347-1.36/0.00 LOG C.R. 271	OHIO	66 / 73
CHKD. BY GHO DATE 9/92		FHWA REGION 5	4 / 11
FEDERAL PROJECT		STATE PROJECT 06554 (0)	

RIGHT OF WAY PLANS

PERRY TOWNSHIP
LOGAN COUNTY
V.M.S. 3164 & 4689

20 0 20 40
SCALE IN FEET

(10 T) HONDA OF AMERICA, MFG. INC.
GROSS TAKE = 0.009 ACRES

(11) CARL BURKHOLDER
GROSS TAKE = 0.721 ACRES
P.R.O. IN TAKE = 0.388 ACRES
NET TAKE = 0.333 ACRES

(12) MARY KERNS
GROSS TAKE = 0.560 ACRES
P.R.O. IN TAKE = 0.280 ACRES
NET TAKE = 0.280 ACRES

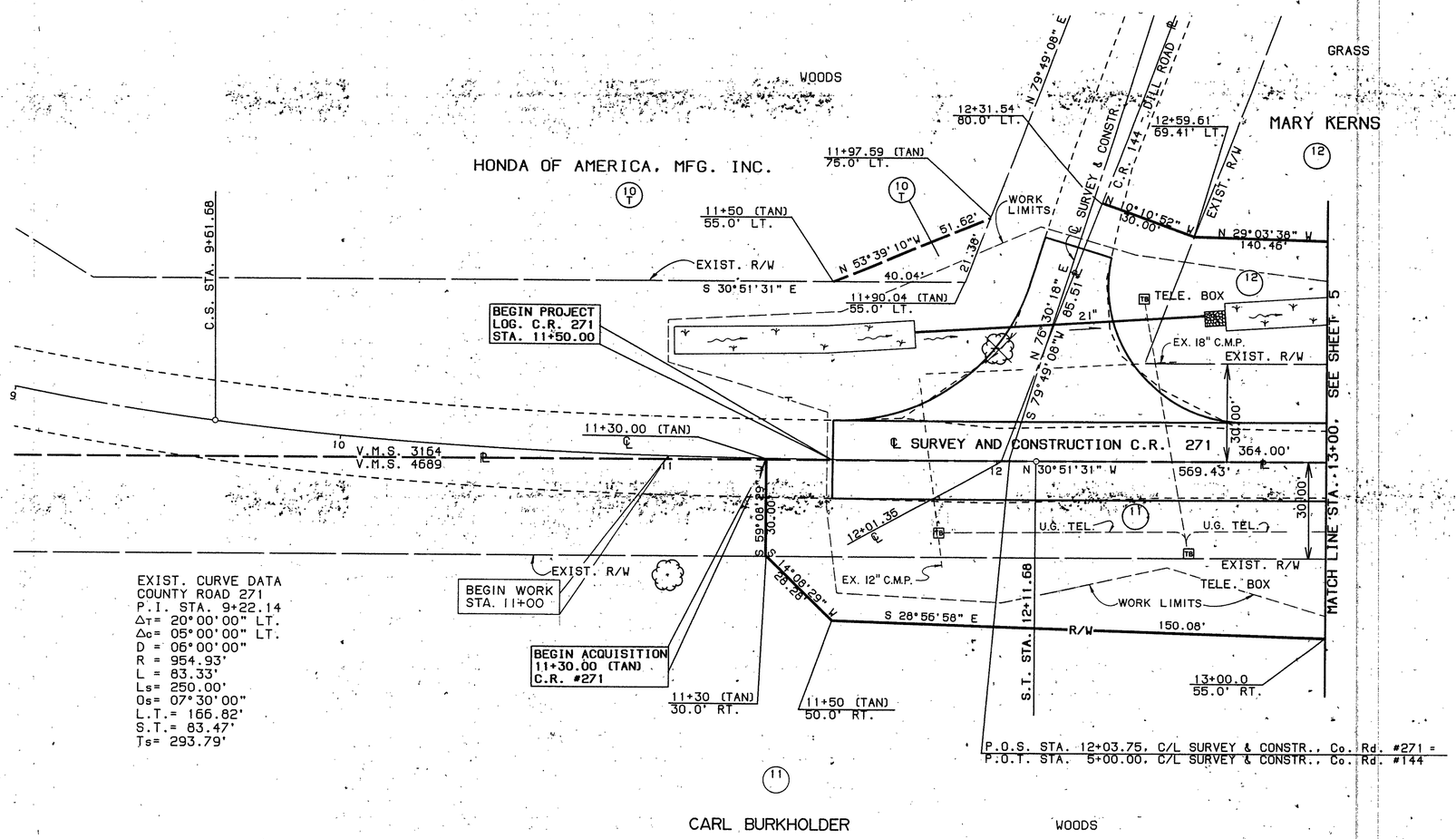

EXIST. CURVE DATA
COUNTY ROAD 271
P.I. STA. 9+22.14
Δ_T= 20°00'00" LT.
Δ_C= 05°00'00" LT.
D = 06°00'00"
R = 954.93'
L = 83.33'
Ls= 250.00'
Os= 07°30'00"
L.T.= 166.82'
S.T.= 83.47'
Ts= 293.79'

TYPE FUNDS: STATE

REV	DATE	DESCRIPTION
		DATE OF COMPLETION

PERRY TOWNSHIP
LOGAN COUNTY
V.M.S. 3164 & 4689

CALC. BY DATE	LOG/UNI-347- 1.36/0.00 LOG C.R. 271	OHIO	67 / 73
CHKD. BY DATE		FHWA REGION 5	5 / 11
FEDERAL PROJECT		STATE PROJECT 06554 (0)	

RIGHT OF WAY PLANS

20 0 20 40
SCALE IN FEET

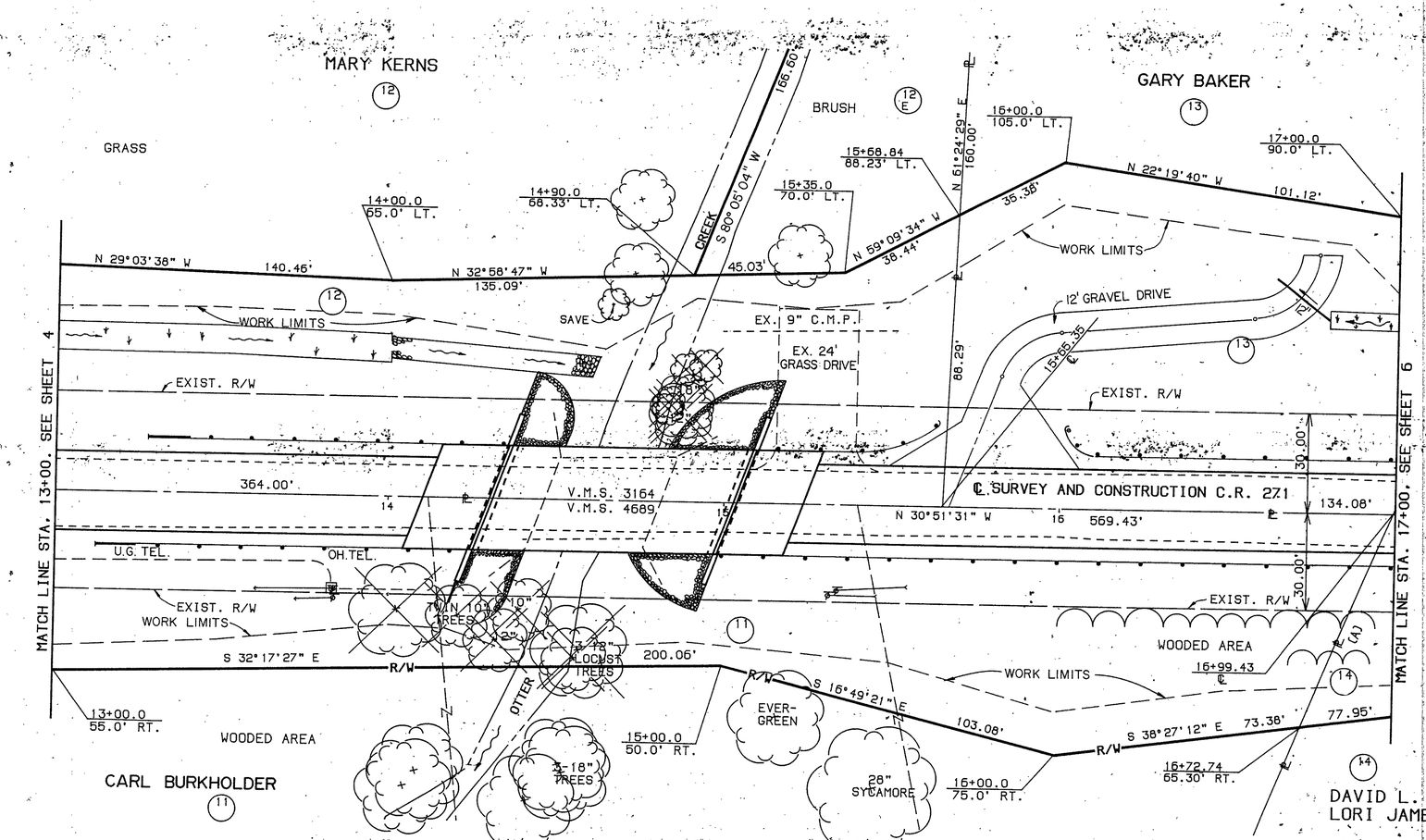

(A) Δ = 00°41'59"
R = 5775.65'
CH = N 81°22'18" E
L = 70.55'
ARC = 70.55'

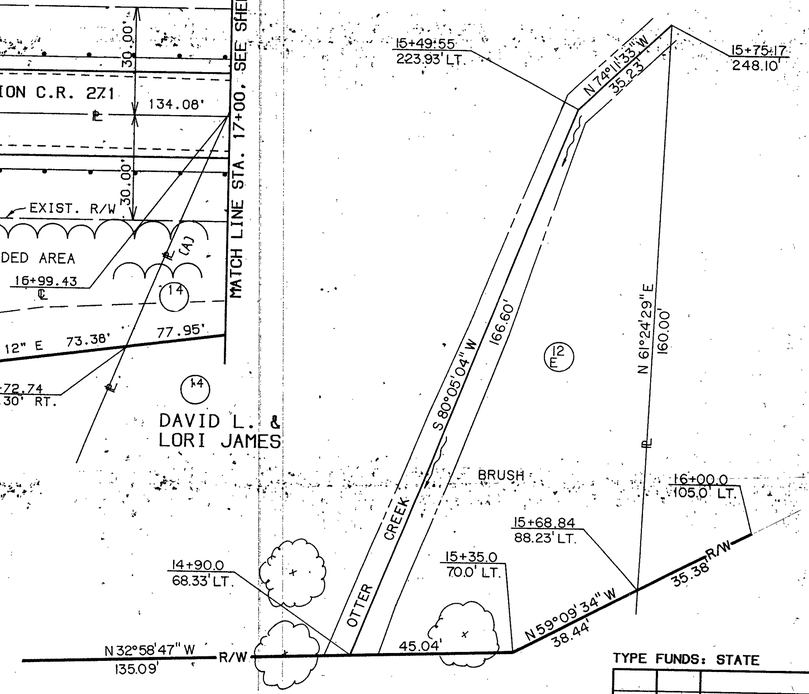

(11) CARL BURKHOLDER
GROSS TAKE = 0.721 ACRES
P.R.O. IN TAKE = 0.388 ACRES
NET TAKE = 0.333 ACRES

(12) MARY KERNS
GROSS TAKE = 0.560 ACRES
P.R.O. IN TAKE = 0.280 ACRES
NET TAKE = 0.280 ACRES

(12 E) TAKE = 0.181 ACRES

(13) GARY BAKER
GROSS TAKE = 0.324 ACRES
P.R.O. IN TAKE = 0.096 ACRES
NET TAKE = 0.228 ACRES

(14) DAVID L. & LORI JAMES
GROSS TAKE = 0.570 ACRES
P.R.O. IN TAKE = 0.382 ACRES
NET TAKE = 0.188 ACRES

TYPE FUNDS: STATE

REV	DATE	DESCRIPTION
		DATE OF COMPLETION

PERRY TOWNSHIP
LOGAN COUNTY
V.M.S. 3164 & 4689

CALC. BY / DATE	LOG/UNI-347-1.36/0.00 LOG C.R. 271	OHIO	68 / 73
CHKD. BY / DATE		FHWA REGION 5	
FEDERAL PROJECT		STATE PROJECT 06554 (0)	6 / 11

RIGHT OF WAY PLANS

20 0 20 40
SCALE IN FEET

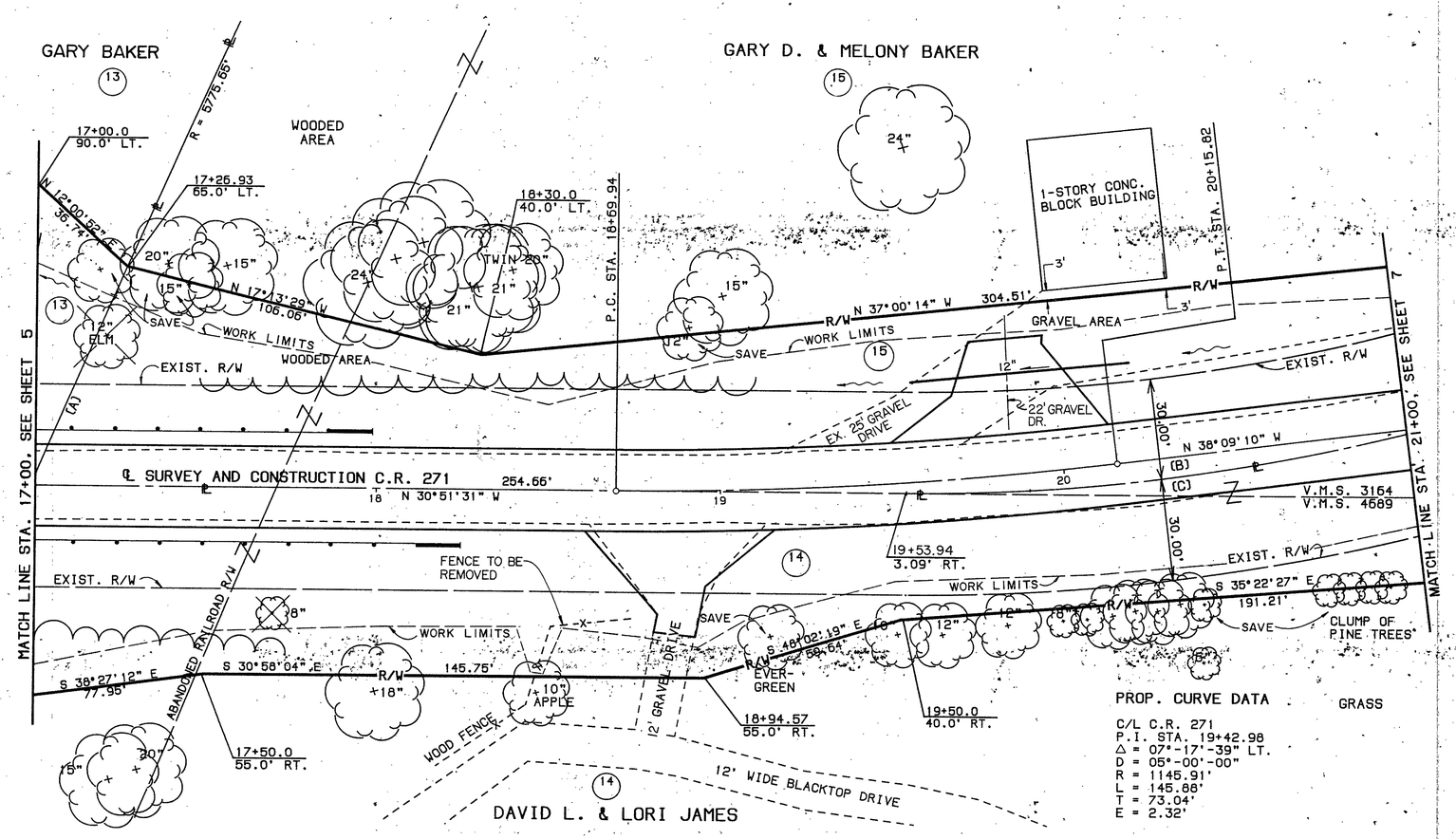

(13) GARY BAKER
GROSS TAKE = 0.324 ACRES
P.R.O. IN TAKE = 0.096 ACRES
NET TAKE = 0.228 ACRES

(14) DAVID L. & LORI JAMES
GROSS TAKE = 0.570 ACRES
P.R.O. IN TAKE = 0.382 ACRES
NET TAKE = 0.188 ACRES

(15) GARY D. & MELONY BAKER
GROSS TAKE = 0.524 ACRES
P.R.O. IN TAKE = 0.315 ACRES
NET TAKE = 0.209 ACRES

PROP. CURVE DATA

C/L C.R. 271
P.I. STA. 19+42.98
Δ = 07°-17'-39" LT.
D = 05°-00'-00"
R = 1145.91'
L = 145.88'
T = 73.04'
E = 2.32'

(A) Δ = 00°42'01"
R = 5775.65'
CH = N 82°04'18" E
L = 70.58'
ARC = 70.58'

(B) Δ = 22°22'41"
R = 573.69'
CH = S 42°02'51" E
L = 222.64'
ARC = 224.07'

(C) Δ = 22°45'56"
R = 573.69'
CH = N 42°14'19" W
L = 226.45'
ARC = 227.95'

TYPE FUNDS: STATE

REV	DATE	DESCRIPTION
		DATE OF COMPLETION

CALC BY BMN DATE 6/92	LOG/UNI-347-1.36/0.00 LOG C.R. 271	OHIO	69/73
CHKD BY DHG DATE 9/92		FHWA REGION 5	
FEDERAL PROJECT		STATE PROJECT 06554 (0)	7/11

RIGHT OF WAY PLANS

PERRY TOWNSHIP
LOGAN COUNTY
V.M.S. 3164 & 4689

20 0 20 40
SCALE IN FEET

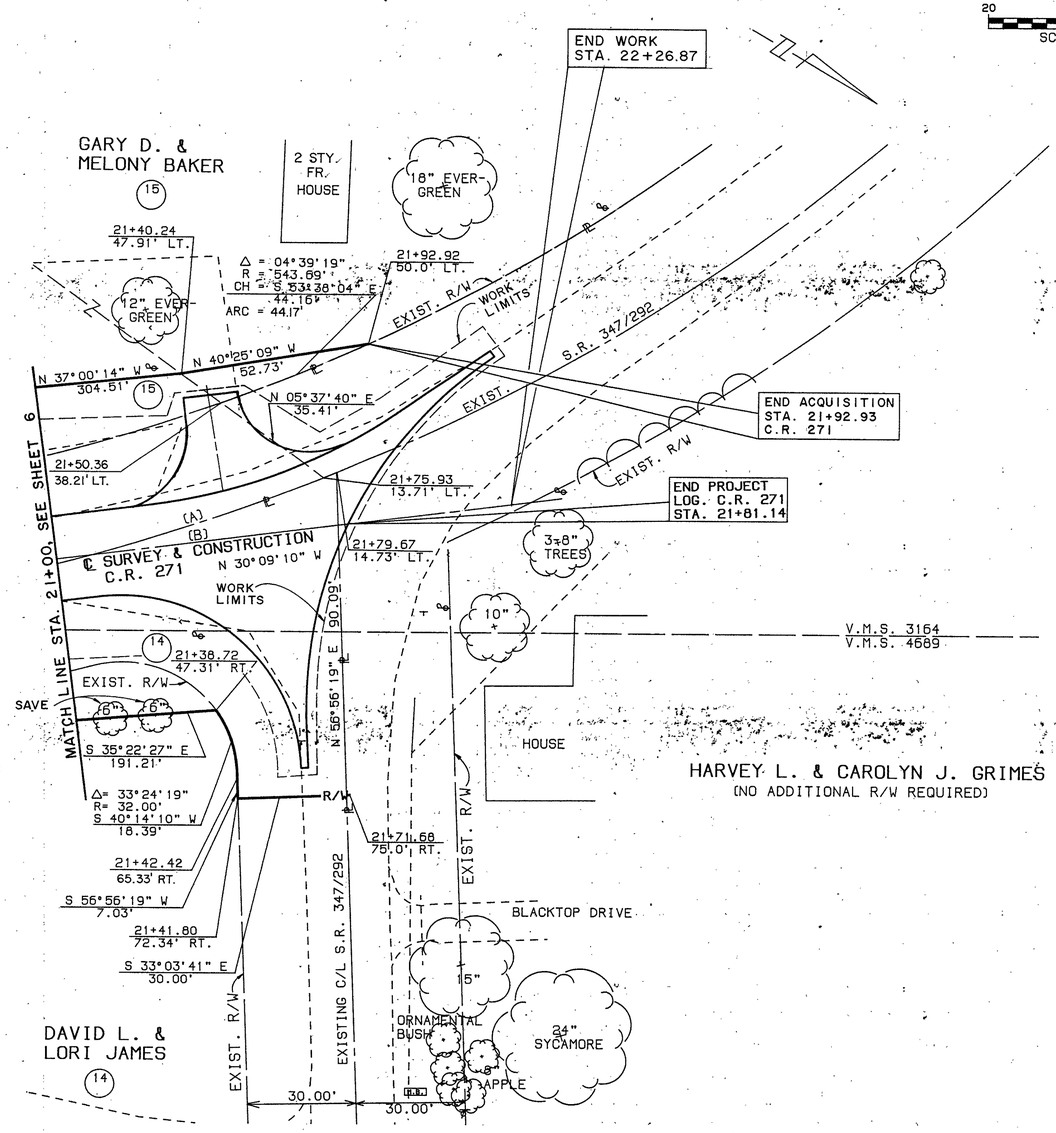

(A) Δ = 22°22'41"
R = 573.69'
CH = S 42°02'51" E
L = 222.64'
ARC = 224.07'

(B) Δ = 22°45'56"
R = 573.69'
CH = N 42°14'29" W
L = 226.45'
ARC = 227.95'

(14) DAVID L. & LORI JAMES
GROSS TAKE = 0.570 ACRES
P.R.O. IN TAKE = 0.382 ACRES
NET TAKE = 0.188 ACRES

(15) GARY D. & MELONY BAKER
GROSS TAKE = 0.524 ACRES
P.R.O. IN TAKE = 0.315 ACRES
NET TAKE = 0.209 ACRES

TYPE FUNDS: STATE

REV	DATE	DESCRIPTION
		DATE OF COMPLETION

CALC. BY BMN DATE 8/92	LOG / UNI - 347 - 1.36 / 0.00 LOG C.R. 271	OHIO	70 / 73
CHKD. BY GWG DATE 9/92		FHWA REGION 5	
FEDERAL PROJECT	STATE PROJECT	06554(0)	8 / 11

RIGHT OF WAY PLAN

CENTERLINE SURVEY PLAT
LOG/UNI - 347 - 1.36/0.00
LOG C.R. 271

S.R. 347 - 2.10
PERRY TOWNSHIP
LOGAN COUNTY
V.M.S. 4810

RECEIVED _____ OF _____
RECORDED _____
PLAT BOOK _____ PAGE _____
SIGNED _____
FEE _____ COUNTY RECORDER

200 0 200 400
SCALE IN FEET

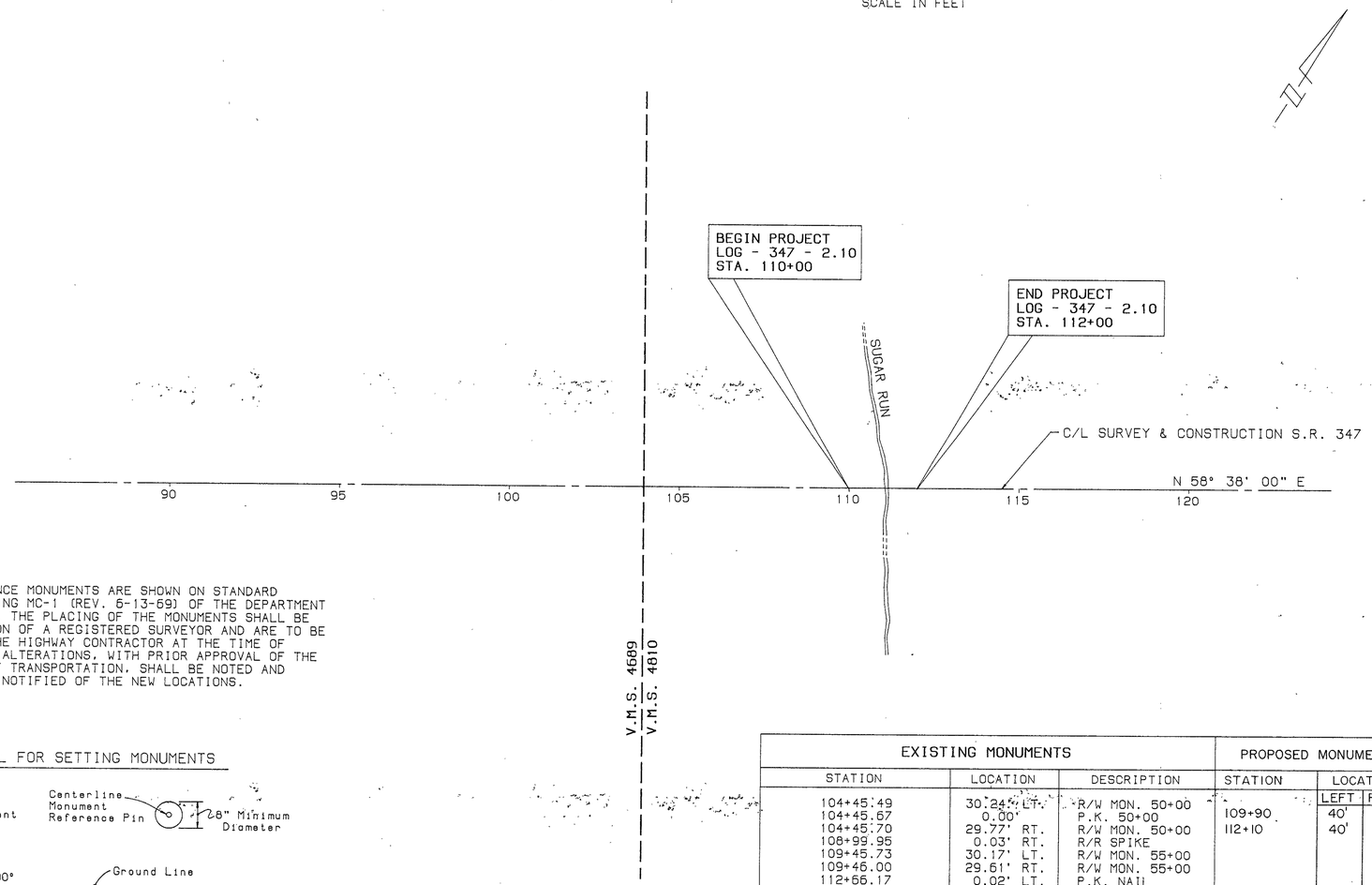

CENTERLINE REFERENCE MONUMENTS ARE SHOWN ON STANDARD CONSTRUCTION DRAWING MC-1 (REV. 6-13-69) OF THE DEPARTMENT OF TRANSPORTATION. THE PLACING OF THE MONUMENTS SHALL BE UNDER THE DIRECTION OF A REGISTERED SURVEYOR AND ARE TO BE SET AS SHOWN BY THE HIGHWAY CONTRACTOR AT THE TIME OF CONSTRUCTION. ANY ALTERATIONS, WITH PRIOR APPROVAL OF THE OHIO DEPARTMENT OF TRANSPORTATION, SHALL BE NOTED AND O.D.O.T. SHALL BE NOTIFIED OF THE NEW LOCATIONS.

THE BASIS FOR THE BEARINGS IS FROM A P.K. NAIL AT STATION 50+00 AND A R.R.S. AT STATION 69+72.49 WITH AN ASSUMED BEARING OF N58°38'00"E AS SHOWN OF RECORD IN THE LOGAN COUNTY ENGINEER'S OFFICE ON ENGINEER'S PLAN L-32.

DETAIL FOR SETTING MONUMENTS

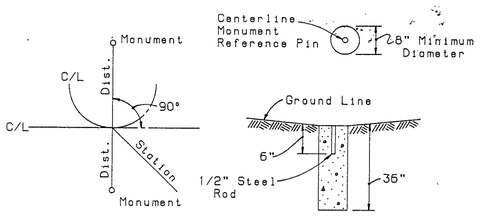

EXISTING MONUMENTS			PROPOSED MONUMENTS		
STATION	LOCATION	DESCRIPTION	STATION	LOCATION LEFT	LOCATION RIGHT
104+45.49	30.24' LT.	R/W MON. 50+00			
104+45.67	0.00'	P.K. 50+00	109+90	40'	40'
104+45.70	29.77' RT.	R/W MON. 50+00	112+10	40'	40'
108+99.95	0.03' RT.	R/R SPIKE			
109+45.73	30.17' LT.	R/W MON. 55+00			
109+46.00	29.61' RT.	R/W MON. 55+00			
112+66.17	0.02' LT.	P.K. NAIL			
114+26.10	28.63' RT.	IRON PIN			
114+26.13	1.44' LT.	R/R SPIKE			
114+45.79	30.12' LT.	R/W MON. 60+00			
115+95.44	1.24' LT.	SOLID IRON PIN			
115+66.20	0.02' LT.	SOLID IRON PIN			
116+96.07	1.64' LT.	R/R SPIKE			
116+96.14	28.33' RT.	RE-ROD			
124+18.55	0.00'	R/R S 69+72.49			

I HEREBY CERTIFY THAT THIS PLAT IS A TRUE DELINEATION OF A SURVEY MADE FOR THE STATE OF OHIO IN 1989 & 1992.

R.D. ZANDE & ASSOCIATES, LTD.
CONSULTING ENGINEERS
COLUMBUS, OHIO

Theodor L. Wallace DATE 9-29-92
REGISTERED SURVEYOR NO. 4650

SURVEYOR'S SEAL

CALC. BY GMH DATE 8/92	LOG / UNI - 347 - 1.36 / 0.00 LOG C.R. 271	OHIO	71 / 73
CHKD. BY GHB DATE 9/92		FHWA REGION 5	9 / 11
FEDERAL PROJECT		STATE PROJECT 06554(0)	

PROPERTY MAP
LOG/UNI - 347 - 1.36/0.00
LOG C.R. 271

S.R. 347 - 2.10
PERRY TOWNSHIP
LOGAN COUNTY
V.M.S. 4810

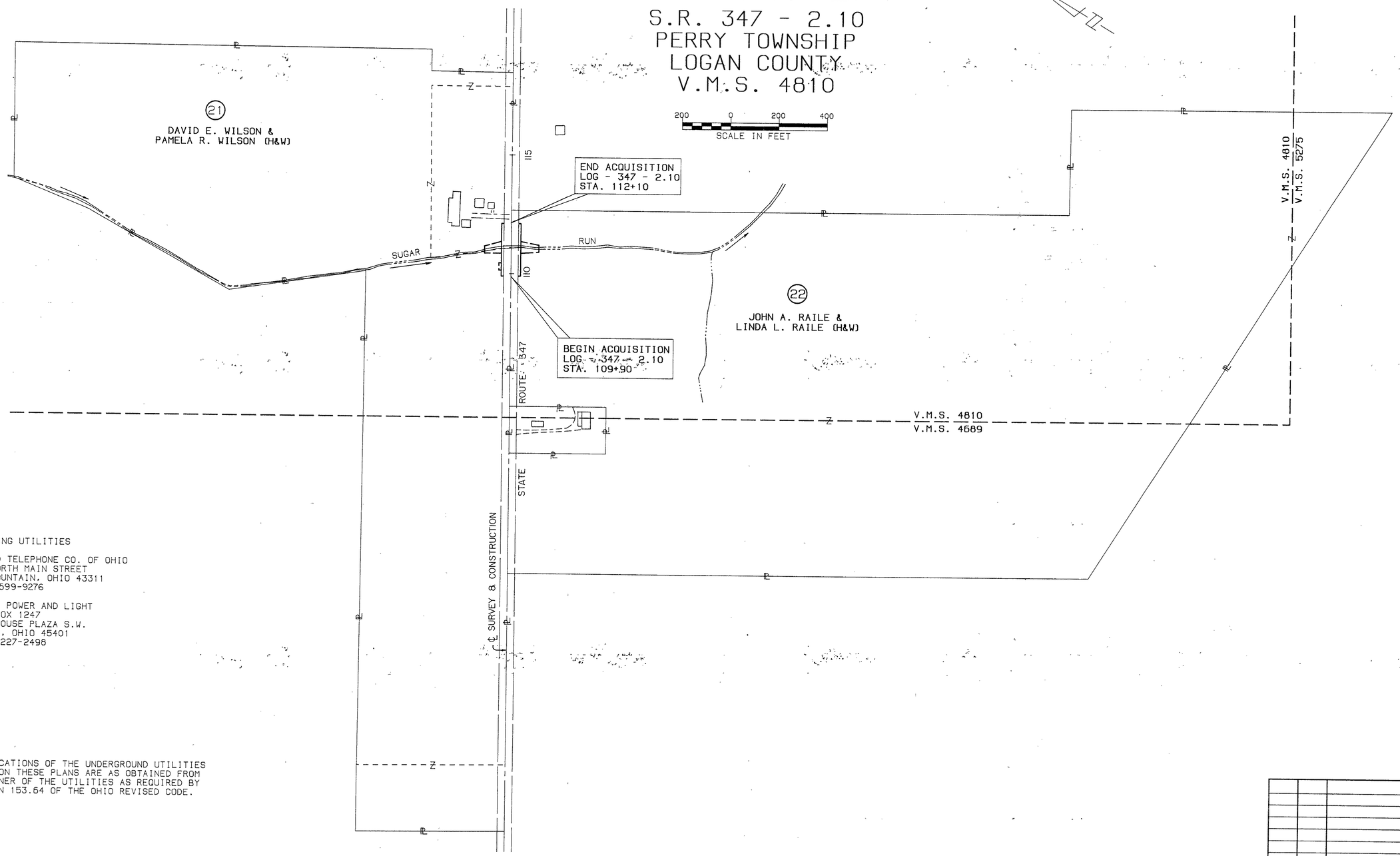

EXISTING UTILITIES

UNITED TELEPHONE CO. OF OHIO
127 NORTH MAIN STREET
BELLFOUNTAIN, OHIO 43311
(513) 599-9276

DAYTON POWER AND LIGHT
P.O. BOX 1247
COURTHOUSE PLAZA S.W.
DAYTON, OHIO 45401
(513) 227-2498

NOTE:
THE LOCATIONS OF THE UNDERGROUND UTILITIES SHOWN ON THESE PLANS ARE AS OBTAINED FROM THE OWNER OF THE UTILITIES AS REQUIRED BY SECTION 153.64 OF THE OHIO REVISED CODE.

REV	DATE	DESCRIPTION

DATE OF COMPLETION

TOTAL NUMBER OF ...
2 OWNERSHIPS
0 TOTAL TAKES
0 OWNERSHIPS W/STRUCTURES INVOLVED
0 OWNERSHIPS W/"P" ITEMS

SUMMARY OF ADDITIONAL RIGHT OF WAY

STATE ROUTE NO.347-2.10

CALC. BY BMH DATE 8/92	LOG / UNI - 347 - 1.36 / 0.00	OHIO	72 / 73
CHKD. BY GHG DATE 9/92	LOG C.R. 271	FHWA REGION 5	10 / 11
FEDERAL PROJECT		STATE PROJECT 06554(0)	

PID NO.5987

PARCEL	OWNER	SHEET NO.	OWNER RECORD BOOK	OWNER RECORD PAGE	AUDITOR'S PARCEL NO.	RECORD AREA (AC)	TOTAL P.R.O.	GROSS TAKE	P.R.O. IN TAKE	NET TAKE	STRUCTURE	NET RESIDUE LEFT	NET RESIDUE RIGHT	TYPE FUNDS	REMARKS AND PERSONALTY	AS ACQUIRED BOOK	AS ACQUIRED PAGE
21	DAVID E. WILSON & PAMELA R. WILSON (H&W)	11	398	859	32-112-00-00-004.000	65.32	1.546	✳0.026	0	0.026	-	63.748	-	STATE	TAX MAP, 8.7 AC. + 35.07 AC. = 43.77 AC., VMS 4810		
					32-112-00-00-003.001									↑	TAX MAP 21.55 AC., VMS 4689		
			398	438	32-112-00-00-004.001	5.43	0.471	0.025	0	0.025		4.934	-		VMS 4810		
			407	543	32-112-00-00-003.000	4.00	0.195		-	-		3.805	-		VMS 4689		
	(TOTAL)					74.75	2.212	0.051	0	0.051		72.487	-				
21X		11			32-112-00-00-004.000			0.080	0	0.080					CHANNEL EASEMENT, 0.030 AC. FROM 8.7 AC. TR. &		
															0.050 AC. FROM 5.43 AC. TR.		
21T		11			32-112-00-00-004.000			0.007	0	0.007					TEMPORARY TO REBUILD DRIVE, DURATION 18 MONTHS		
															IN 6 MONTH INCREMENTS		
															✳0.026 AC. FROM 8.7 AC. TRACT		
22	JOHN A. RAILE & LINDA L. RAILE (H&W)	11	33	163	32-112-00-00-026.000	61.81	0.567	0.051	0	0.051	-	-	61.192		VMS 4810		
					32-112-00-00-030.000	48.86	0.350					-	48.510		VMS 4689		
						3.05	-					-	3.05		ABANDONED R.R.		
	(TOTAL)					113.72	0.917	0.051	0	0.051		-	112.752				
22X		11			32-112-00-00-026.000			0.086	-	0.086					CHANNEL EASEMENT, VMS 4810		
16T	MARVIN A. MITCHELL & FLO JEAN MITCHELL (H&W)	IIA	368	179		64.983		0.031	–	0.031		64.983	–		TEMPORARY FOR GRADING, DURATION 18 MONTHS		
17T	HALLEY M. ACKLEY & REBECCA A. ACKLEY (H&W)	IIA	118	252	32-112-00-00-025.000	75.68		0.028	–	0.028		–	75.68		TEMPORARY FOR GRADING, DURATION 18 MONTHS		
18T	ROGER M. HATCHER	IIB	O.R. 18	375	32-112-00-00-011	1.192		0.039	–	0.039		1.192	–		TEMPORARY FOR GRADING, DURATION 18 MONTHS		
	JOHN H. HATCHER & MARY E. HATCHER-LIFE ESTATE				32-097-00-00-044	63.53						63.53	–				
					32-112-00-00-010	77.25						77.25	–				
	(TOTAL)					141.972						141.972	–				
19T	GEORGE NELSON BAXLEY & DEBORAH A. BAXLEY (H&W)	IIB	O.R. 58	204	32-112-00-00-023	42.50		0.007	–	0.007		–	42.50		TEMPORARY FOR GRADING, DURATION 18 MONTHS		
20T	CAROL W. LOSEY & CHAROLET L. LOSEY (H&W)	IIB	79	813	32-112-00-00-015.003	63.806		0.023	–	0.023		63.806	–		TEMPORARY FOR GRADING, DURATION 18 MONTHS		
					32-112-00-00-015.001	23.25						23.25	–				
					32-112-00-00-015.002	29.94						29.94	–				
					32-097-00-00-049	62.00						62.00	–				
	(TOTAL)					178.996						178.996	–				
23T	MARY ELLEN MOORE	IIB	53	839	32-112-00-00-019	49.87		0.029	–	0.029		–	49.87		TEMPORARY FOR GRADING, DURATION 18 MONTHS		
					32-112-00-00-021	20.57						–	20.57				
					32-112-00-00-022	54.02						–	54.02	↓			
	(TOTAL)					124.46						–	124.46	STATE			

REV	DATE	DESCRIPTION
RDM	1-22-93	Added Parcels 16-20 & 23

DATE OF COMPLETION

CALC. BY GMH DATE 8/92	LOG / UNI - 347 - 1.36 / 0.00 LOG C.R. 271	OHIO	73 / 73
CHKD. BY GHG DATE 9/92		FHWA REGION 5	11 / 11
FEDERAL PROJECT		STATE PROJECT 06554(0)	

RIGHT OF WAY PLAN

LOGAN COUNTY
PERRY TOWNSHIP
V.M.S. 4810

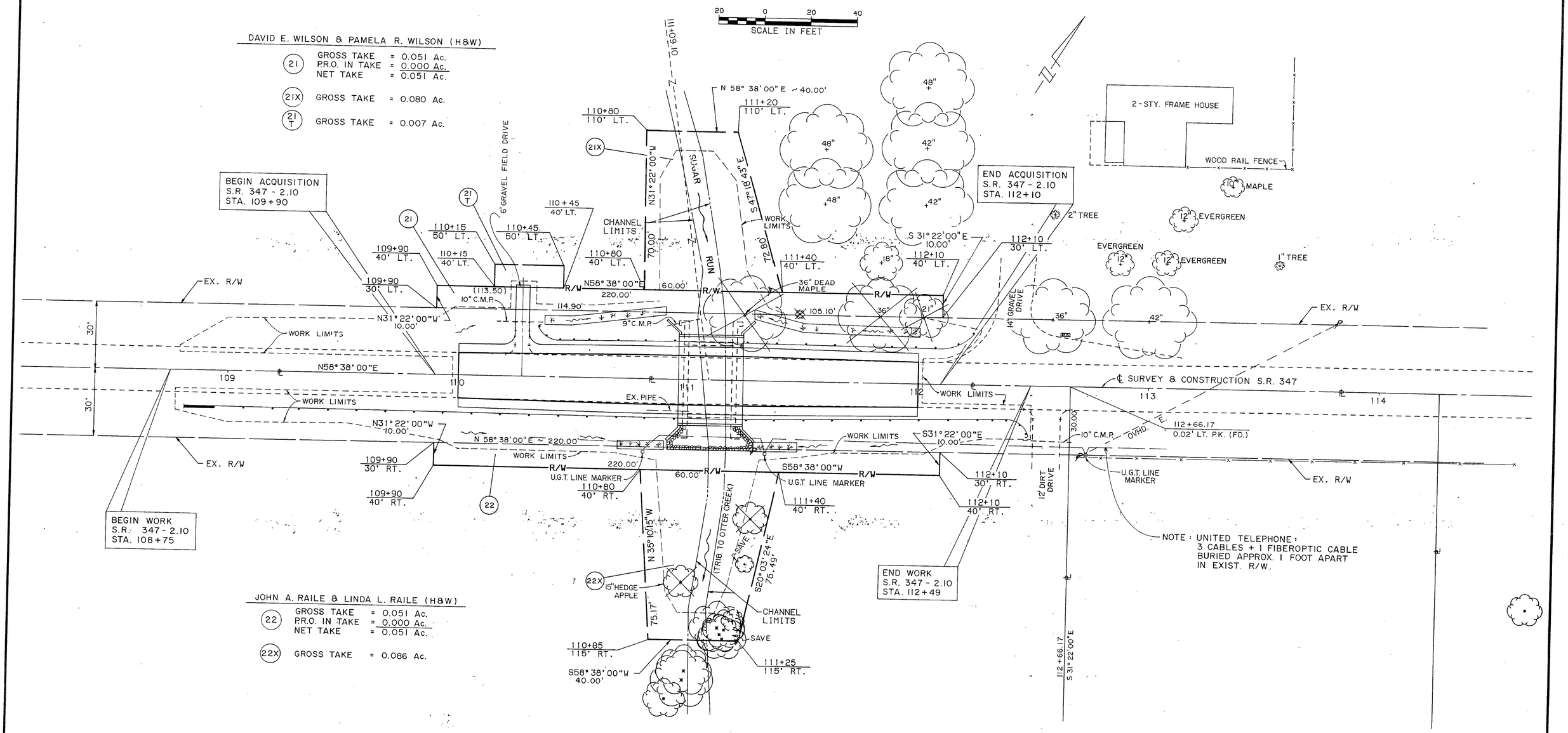

REV	DATE	DESCRIPTION

DATE OF COMPLETION

CALC. BY JR DATE 3/92	LOG/UNI-347-1.36/0.00	OHIO
CHKD. BY GHO DATE 9/92	LOG. C.R. 271	FHWA REGION 5

73A 73B

11A 11B

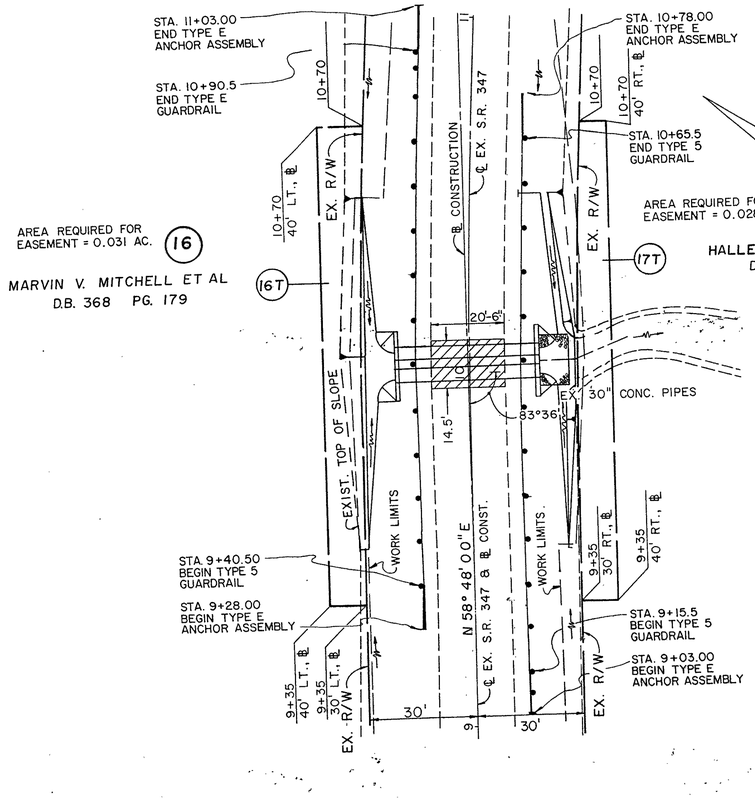

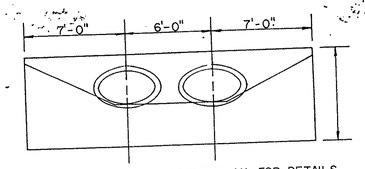

HW-1 HEADWALL, AS PER PLAN. FOR DETAILS NOT SHOWN, SEE O.D.O.T. STD. DWG. HW-1

NOTE: FOR X-SECTIONS SEE SHEET NO. 22.

ITEM 301 9" BITUMINOUS AGGREGATE BASE
ITEM 304 6" AGGREGATE BASE
ITEM 402 2" ASPHALT CONCRETE, AC-20

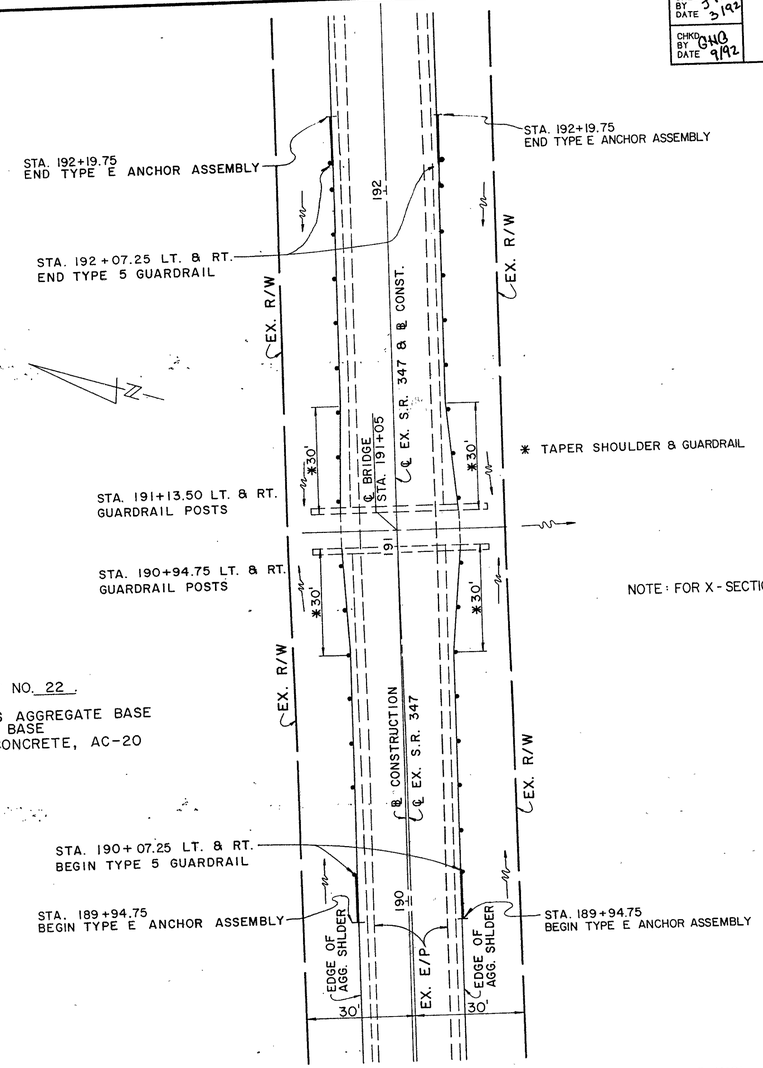

PLAN

DRAINAGE AREA	= 82.8 Ac.
Q25	= 93.0 C.F.S.
Q100	= 113.0 C.F.S.
HW100	= 1088.77
HW25	= 1088.27

ITEM 802 BARRIER REFLECTOR, TYPE A	= 6 EACH
ITEM 203 EXCAVATION NOT INCL. EMB. CONSTR.	= 23 CU. YD.
ITEM 603 CONDUIT, TYPE A, 29"x45", 706.04 OR 42", 707.01	= 80 LIN FT.
ITEM 601 ROCK CHAN. PROTECT., TYPE C WITH FILTER	= 6.3 CU YD.
ITEM 602 CONCRETE MASONRY	= 14.9 CU. YD.
ITEM 301 BITUMINOUS AGGREGATE BASE	= 9 CU. YD.
ITEM 304 AGGREGATE BASE, AS PER PLAN	= 6 CU. YD.
ITEM 203 EMBANKMENT	= 72 CU. YD.
ITEM 659 SEEDING AND MULCHING	= 1319 SQ. YD.
ITEM 402 ASPHALT CONCRETE, AC-20	= 2 CU. YD.
ITEM 606 GUARDRAIL, TYPE 5	= 300 LIN. FT
ITEM 606 ANCHOR ASSEMBLY, TYPE E	= 4 EACH

QUANTITES CARRIED TO ***SHEET 20.***

20 0 20 40
SCALE IN FEET

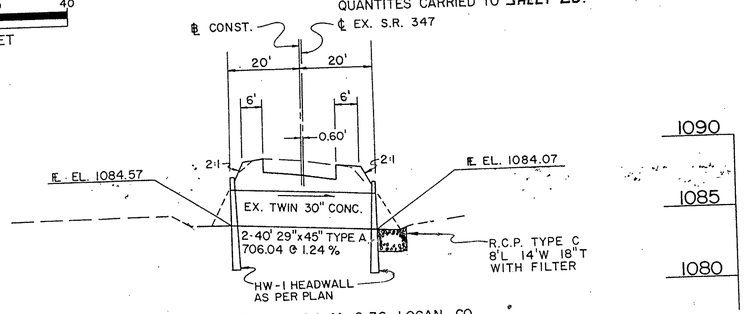

STA. 10+00 = S.L.M. 2.36 LOGAN CO.

20 0 20 40
SCALE IN FEET

ITEM 203 EXCAVATION NOT INCL. EMB. CONSTR.	= 79 CU. YD.
ITEM 606 GUARDRAIL, TYPE 5	= 362.5 LIN. FT.
ITEM 606 ANCHOR ASSEMBLY, TYPE E	= 4 EACH
ITEM 659 SEEDING & MULCHING	= 1052 SQ. YD.
ITEM 802 BARRIER REFLECTOR, TYPE A	= 8 EACH
ITEM 606 BRIDGE TERMINAL ASSEMBLY, TYPE 4	= 4 EACH

QUANTITIES CARRIED TO ***SHEET 20.***

STA. 191+05 ℄ BRIDGE NO. LOGAN CO. 347-3.62

FOR STRUCTURE DETAILS SEE SHEET NO. 61-62.

S.L.M. 2.36 & 3.62 CULVERT DETAILS

CALC. BY / DATE	LOG / UNI - 347 - 1.36 / 0.00 LOG C.R. 271	OHIO
CHKD. BY / DATE		FHWA REGION 5

73B / 73B

11B / 11B

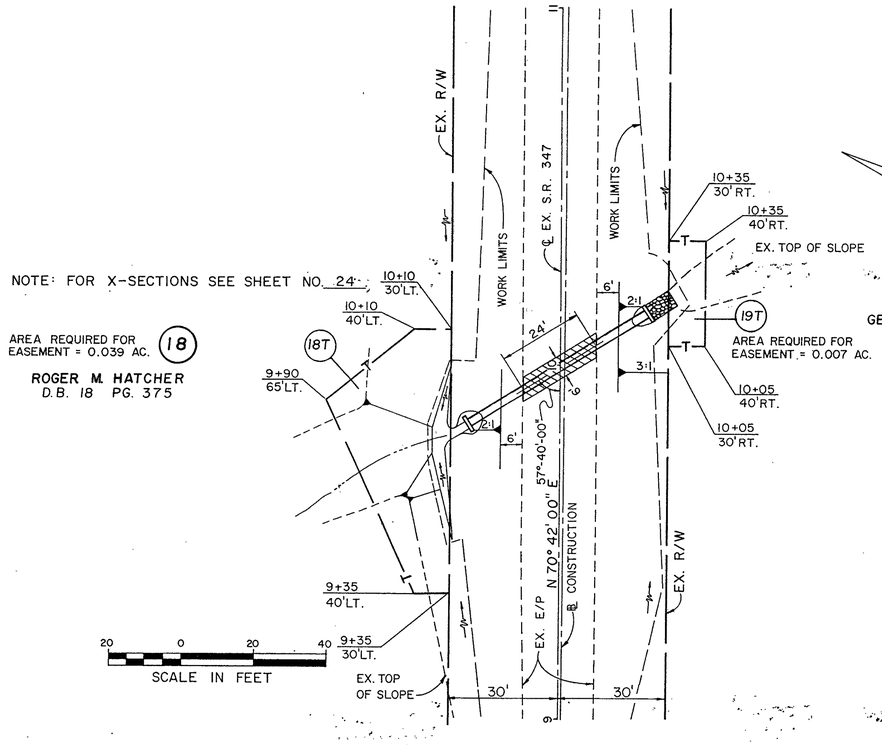

NOTE: FOR X-SECTIONS SEE SHEET NO. 24

AREA REQUIRED FOR EASEMENT = 0.039 AC. (18)

ROGER M. HATCHER
D.B. 18 PG. 375

(19)

GEORGE NELSON BAXLEY ET AL
D.B. 58 PG. 204

(20)

CAROL W. LOSEY ET AL
D.B. 79 PG. 813

ITEM 301 9" BITUMINOUS AGGREGATE BASE
ITEM 304 6" AGGREGATE BASE
ITEM 402 2" ASPHALT CONCRETE, AC-20

DRAINAGE AREA	=	42.2 Ac.
Q25	=	41.2 C.F.S.
Q100	=	50.6 C.F.S.
HW100	=	1085.73
HW25	=	1084.58

ITEM 603 CONDUIT, TYPE A, 30", 706.02 OR 36" 707.01	=	60 LIN. FT.
ITEM 601 ROCK CHAN. PROTECT., TYPE C W/ FILTER	=	2.3 CU. YD.
ITEM 602 CONCRETE MASONRY	=	1.52 CU. YD.
ITEM 301 BITUMINOUS AGGREGATE BASE	=	4 CU. YD.
ITEM 304 AGGREGATE BASE, AS PER PLAN	=	3 CU. YD.
ITEM 203 EMBANKMENT	=	48 CU. YD.
ITEM 659 SEEDING & MULCHING	=	958 SQ. YD.
ITEM 402 ASPHALT CONCRETE, AC-20	=	1 CU. YD.

QUANTITIES CARRIED TO **SHEET 21.**

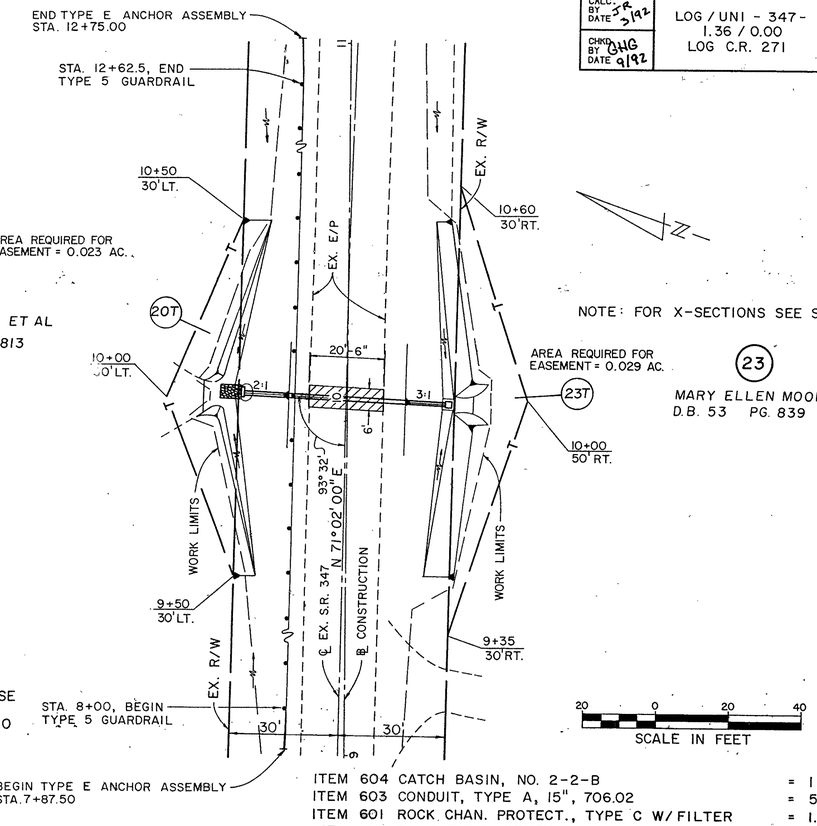

NOTE: FOR X-SECTIONS SEE SHEET NO. 25-26.

AREA REQUIRED FOR EASEMENT = 0.029 AC. (23)

MARY ELLEN MOORE
D.B. 53 PG. 839

DRAINAGE AREA	=	5.5 Ac.
Q25	=	7.8 C.F.S.
Q100	=	9.7 C.F.S.
HW100	=	1090.08
HW25	=	1088.52

ITEM 604 CATCH BASIN, NO. 2-2-B	=	1 EACH
ITEM 603 CONDUIT, TYPE A, 15", 706.02	=	56 LIN. FT.
ITEM 601 ROCK CHAN. PROTECT., TYPE C W/ FILTER	=	1.4 CU. YD.
ITEM 602 CONCRETE MASONRY	=	0.50 CU. YD.
ITEM 301 BITUMINOUS AGGREGATE BASE	=	4 CU. YD.
ITEM 304 AGGREGATE BASE, AS PER PLAN	=	3 CU. YD.
ITEM 606 GUARDRAIL, TYPE 5	=	462.5 LIN. FT.
ITEM 606 ANCHOR ASSEMBLY, TYPE E	=	2 EACH
ITEM 203 EXCAVATION NOT INCLUDING EMB. CONST.	=	30 CU. YD.
ITEM 802 BARRIER REFLECTOR, TYPE A	=	6 EACH
ITEM 203 EMBANKMENT	=	47 CU. YD.
ITEM 659 SEEDING AND MULCHING	=	1830 SQ. YD.
ITEM 402 ASPHALT CONCRETE, AC-20	=	1 CU. YD.

QUANTITIES CARRIED TO **SHEET 21.**

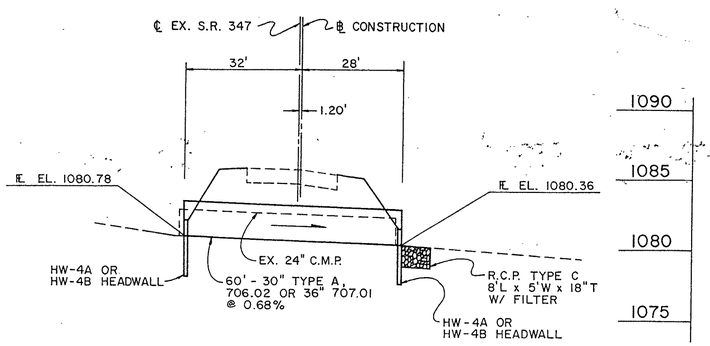

STA. 10+00 = S.L.M. 2.70 LOGAN CO.

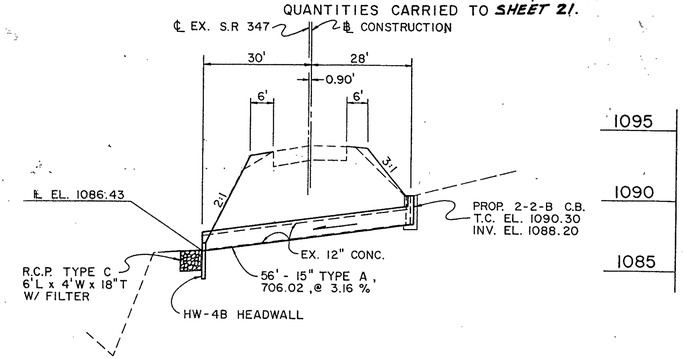

STA. 10+00 = 3.05 S.L.M. LOGAN CO.

1-25-93 RDM Revised ownership of Parcel 18